# Fuel Pump Control Circuit

## DESCRIPTION

When the engine is cranked, current flows from terminal ST2 of the ignition switch into the ST (starter) relay coil and current also flows into terminal STA of the ECM (STA signal).
When the STA and NE signals are received by the ECM, Tr (power transistor) is switched on, allowing current to flow into the circuit opening relay coil. The circuit opening relay switches on, power is supplied to the fuel pump and the fuel pump operates.
While the NE signal is being generated (engine running), the ECM keeps Tr ON, therefore keeping the circuit opening relay ON, so that the fuel pump continues to operate.

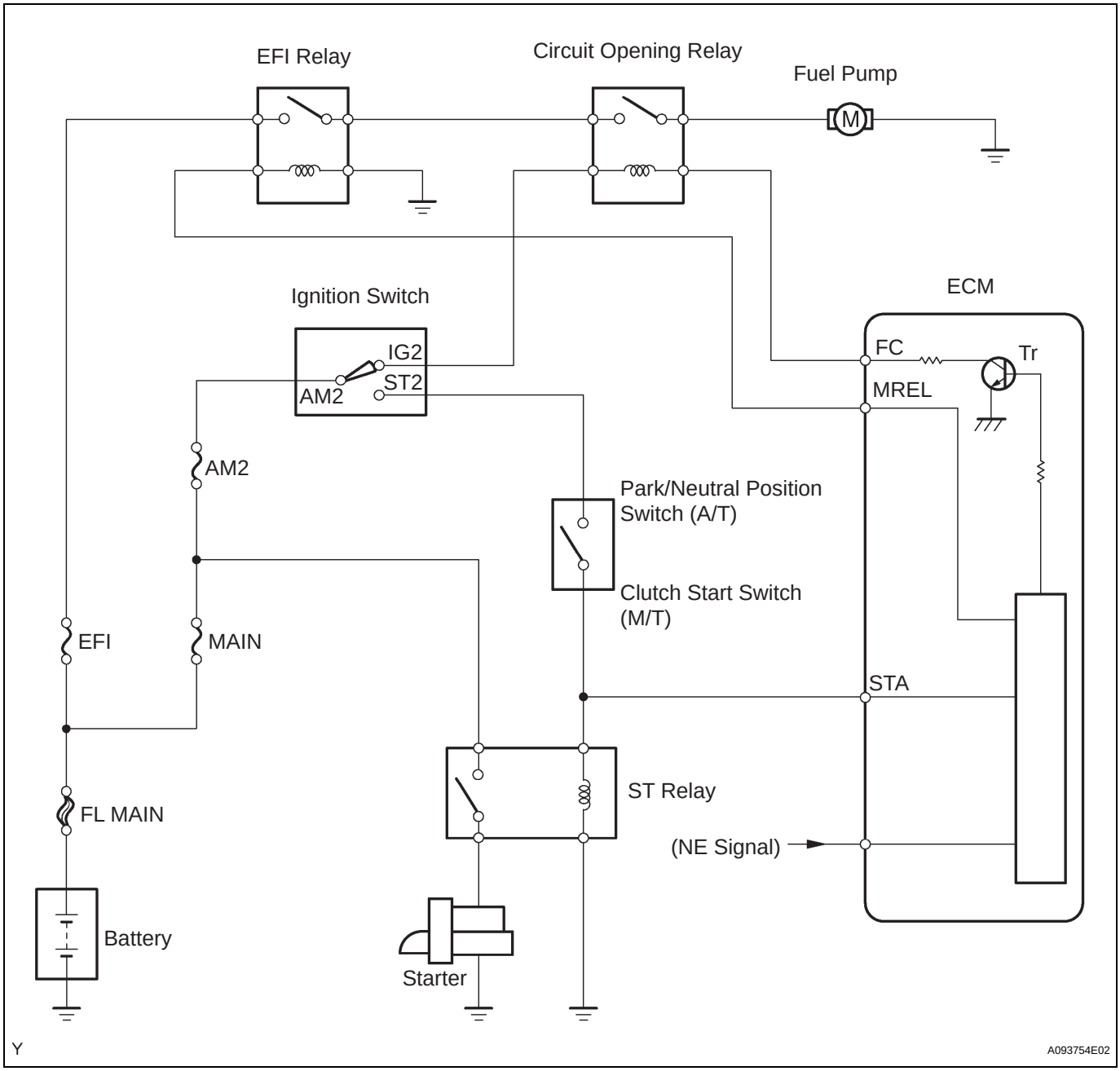


cardiagn.com

## WIRING DIAGRAM

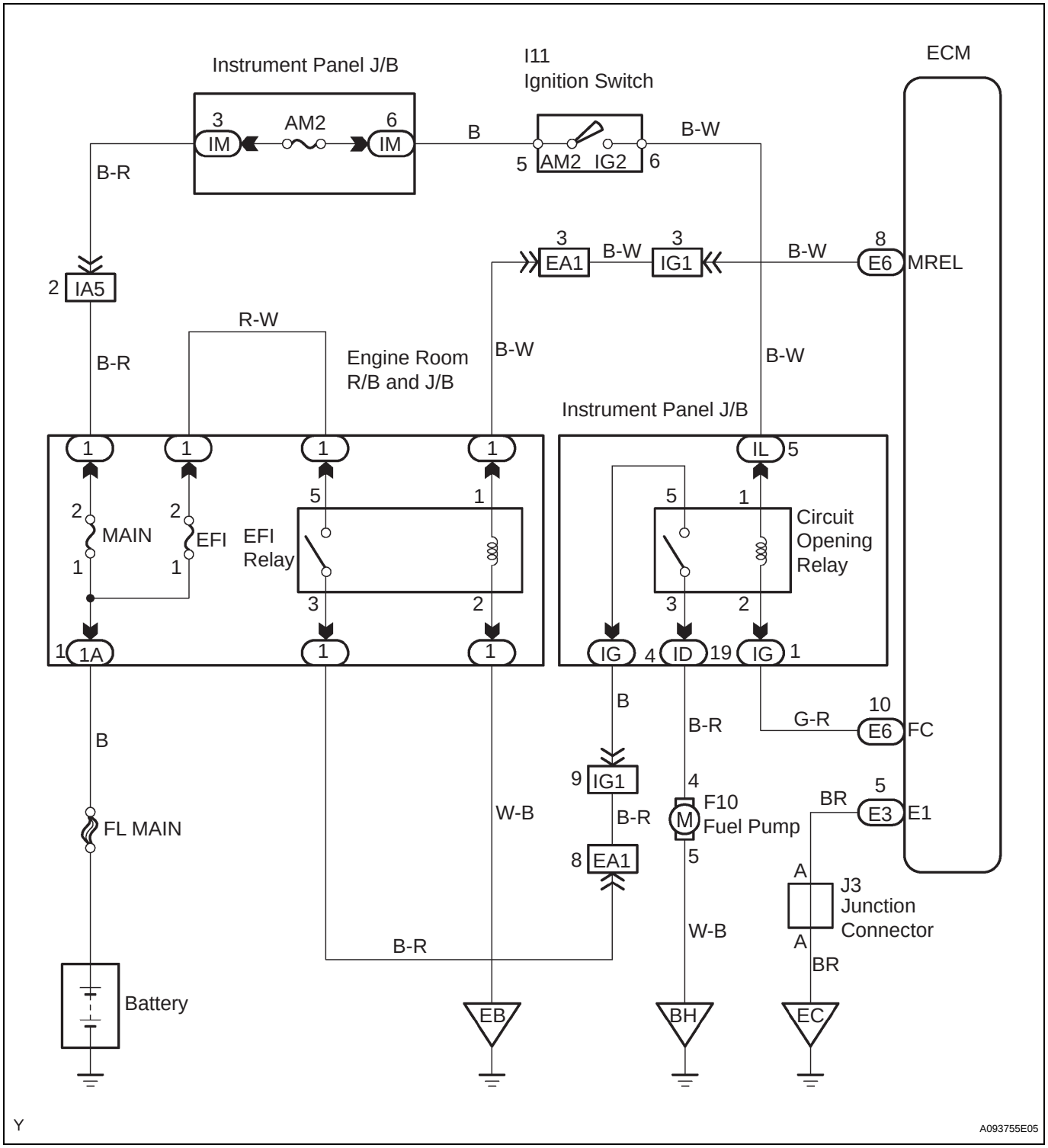


## INSPECTION PROCEDURE

### When using intelligent tester:

| | |
|---|---|
| **1** | **PERFORM ACTIVE TEST BY INTELLIGENT TESTER (OPERATION OF CIRCUIT OPENING RELAY)** |

(a) Connect an intelligent tester to the DLC3.

cardiagn.com

(b) Turn the ignition switch to ON and turn the tester ON.
(c) Select the following menu items: DIAGNOSIS / ENHANCED OBD II / ACTIVE TEST / FUEL PUMP/ SPD.
(d) Check whether operating sounds can be heard while operating the relay using the tester.
**OK:**
**Operating sounds can be heard from relay.**

**OK** → **Go to step 7**

**NG**

ES

## 2 INSPECT ECM POWER SOURCE CIRCUIT

(a) Inspect the ECM power source circuit (See page ES-371).

**NG** → **REPAIR OR REPLACE ECM POWER SOURCE CIRCUIT**

**OK**

## 3 INSPECT CIRCUIT OPENING RELAY

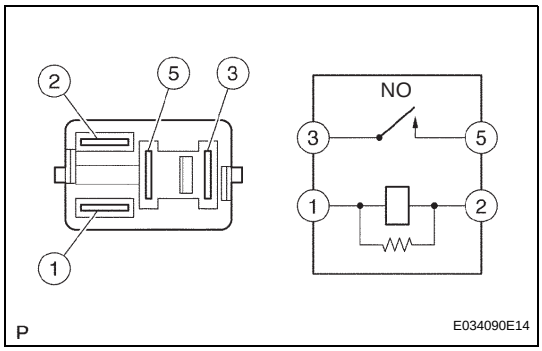


(a) Remove the circuit opening relay from the instrument panel J/B.
(b) Check the circuit opening relay resistance.
**Standard resistance**

| Tester Connections | Specified Conditions |
|---|---|
| 3 - 5 | 10 kΩ or higher |
| 3 - 5 | Below 1 Ω (when battery voltage applied to terminals 1 and 2) |

(c) Reinstall the circuit opening relay.

**NG** → **REPLACE CIRCUIT OPENING RELAY**

**OK**

## 4 INSPECT ECM (FC VOLTAGE)

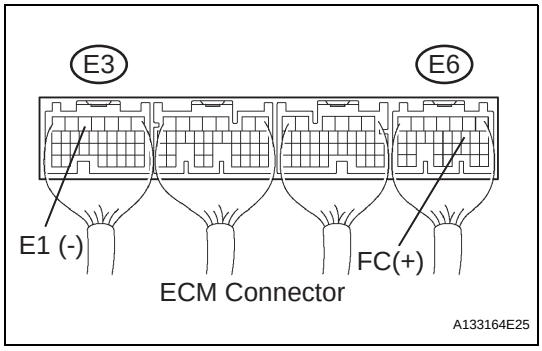


(a) Turn the ignition switch to ON.
(b) Measure the voltage between the terminals of the E3 and E6 ECM connectors.
**Standard voltage**

| Tester Connections | Specified Conditions |
|---|---|
| FC (E6-10) - E1 (E3-5) | Between 9 V and 14 V |

**OK** → **REPLACE ECM**

cardiagn.com

NG

## 5 CHECK HARNESS AND CONNECTOR (IGNITION SWITCH - CIRCUIT OPENING RELAY)

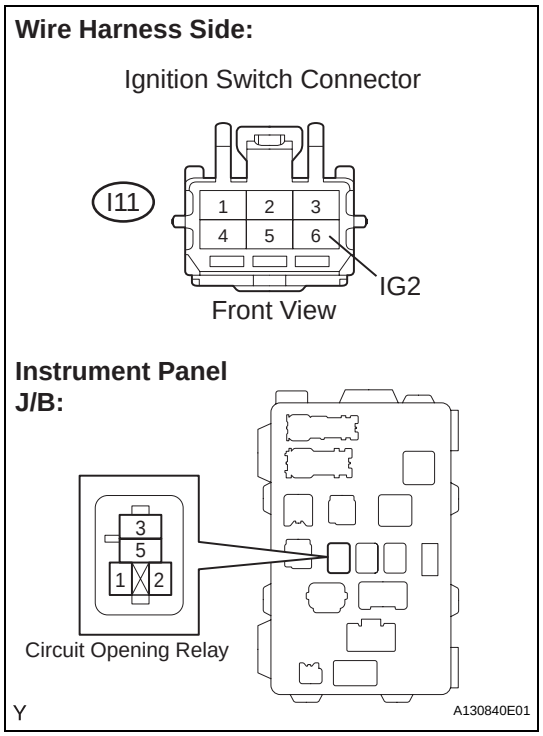


(a) Disconnect the I11 ignition switch connector.
(b) Remove the circuit opening relay from the instrument panel J/B.
(c) Check the resistance.

**Standard resistance (Check for open)**

| Tester Connections | Specified Conditions |
|---|---|
| IG2 (I11-6) - Instrument panel J/B (Circuit opening relay terminal 1) | Below 1 Ω |

**Standard resistance (Check for short)**

| Tester Connections | Specified Conditions |
|---|---|
| IG2 (I11-6) or Instrument panel J/B (Circuit opening relay terminal 1) - Body ground | 10 kΩ or higher |

(d) Reinstall the circuit opening relay.
(e) Reconnect the ignition switch connector.

NG → **REPAIR OR REPLACE HARNESS OR CONNECTOR**

OK

## 6 CHECK HARNESS AND CONNECTOR (ECM - CIRCUIT OPENING RELAY)

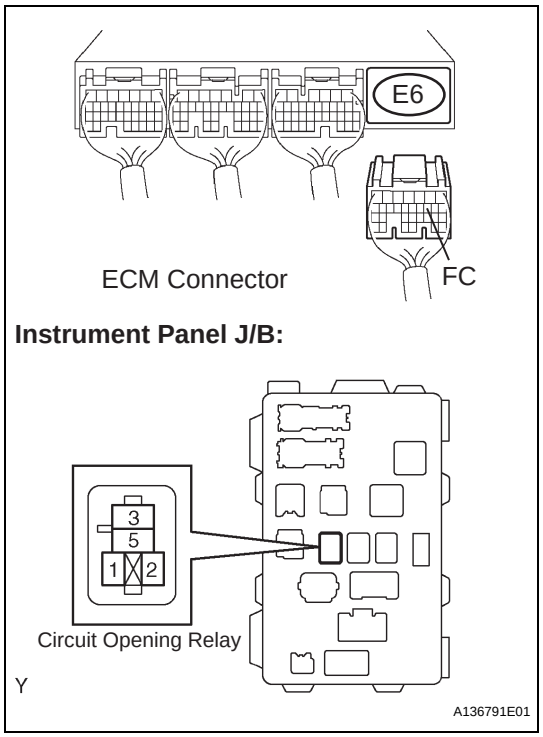


(a) Disconnect the E6 ECM connector.
(b) Remove the circuit opening relay from the instrument panel J/B.
(c) Check the resistance.

**Standard resistance (Check for open)**

| Tester Connections | Specified Conditions |
|---|---|
| FC (E6-10) - Instrument panel J/B (Circuit opening relay terminal 2) | Below 1 Ω |

**Standard resistance (Check for short)**

| Tester Connections | Specified Conditions |
|---|---|
| FC (E6-10) or Instrument panel J/B (Circuit opening relay terminal 2) - Body ground | 10 kΩ or higher |

(d) Reinstall the circuit opening relay.
(e) Reconnect the ECM connector.

NG → **REPAIR OR REPLACE HARNESS OR CONNECTOR**



cardiagn.com

**OK**

**REPLACE ECM**

| 7 | INSPECT FUEL PUMP |
|---|---|

(a) Inspect the fuel pump (See page FU-23).

**NG** → **REPLACE FUEL PUMP**

ES

**OK**

| 8 | CHECK HARNESS AND CONNECTOR (CIRCUIT OPENING RELAY - FUEL PUMP, FUEL PUMP - BODY GROUND) |
|---|---|

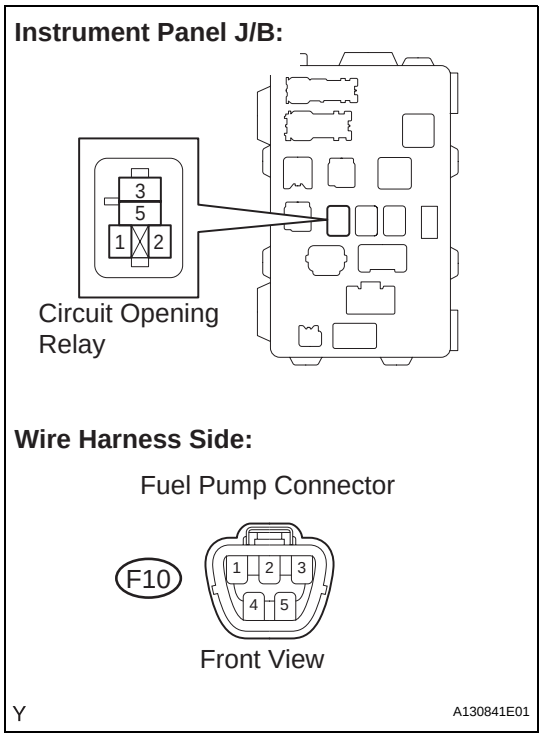


(a) Remove the circuit opening relay from the instrument panel J/B.
(b) Disconnect the F10 fuel pump connector.
(c) Check the resistance.

**Standard resistance (Check for open)**

| Tester Connections | Specified Conditions |
|---|---|
| Instrument panel J/B (Circuit opening relay terminal 3) - Fuel pump (F10-4) | Below 1 Ω |
| Fuel pump (F10-5) - Body ground | Below 1 Ω |

**Standard resistance (Check for short)**

| Tester Connections | Specified Conditions |
|---|---|
| Instrument panel J/B (Circuit opening relay terminal 3) or Fuel pump (F10-4) - Body ground | 10 kΩ or higher |

(d) Reconnect the fuel pump connector.
(e) Reinstall the circuit opening relay.

**NG** → **REPAIR OR REPLACE HARNESS OR CONNECTOR**

**OK**

**CHECK AND REPAIR HARNESS AND CONNECTOR (EFI RELAY - CIRCUIT OPENING RELAY)**

cardiagn.com

## When Using OBD II Scan Tool:

### 1 CHECK FUEL PUMP (OPERATION)

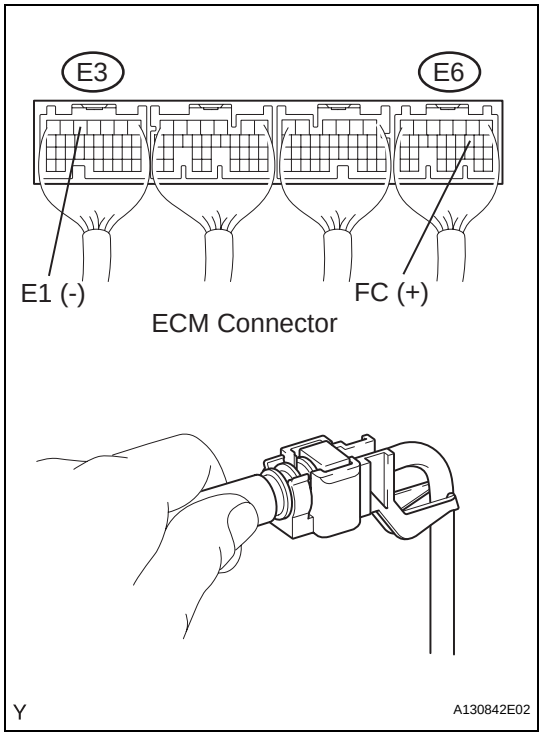


(a) Turn the ignition switch to ON.
(b) Connect terminals FC and E1 of the ECM connector.
(c) Check for fuel pressure in the fuel inlet hose when it is pinched off.
**OK:**
**There is pressure in fuel inlet hose.**
HINT:
At this time, operating sounds can be heard from the fuel pump.

**OK** → **PROCEED TO NEXT CIRCUIT INSPECTION SHOWN IN PROBLEM SYMPTOMS TABLE**

**NG**

### 2 INSPECT ECM POWER SOURCE CIRCUIT

(a) Inspect the ECM power source circuit (See page ES-371).

**NG** → **REPAIR OR REPLACE ECM POWER SOURCE CIRCUIT**

**OK**

### 3 INSPECT CIRCUIT OPENING RELAY

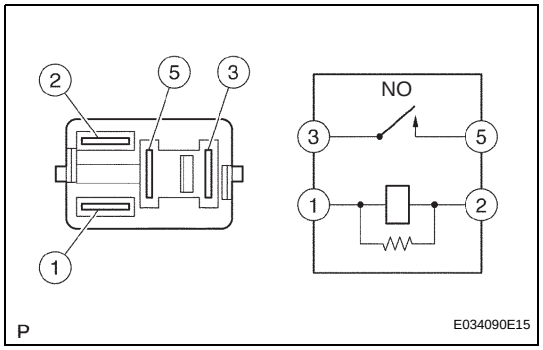


(a) Remove the circuit opening relay from the instrument panel J/B.
(b) Check the circuit opening relay resistance.
**Standard resistance**

| Tester Connections | Specified Conditions |
|---|---|
| 3 - 5 | 10 kΩ or higher |
| 3 - 5 | Below 1 Ω (when battery voltage is applied to terminals 1 and 2) |

(c) Reinstall the circuit opening relay.

**NG** → **REPLACE CIRCUIT OPENING RELAY**

ES

cardiagn.com

**OK**

## 4 INSPECT ECM (FC VOLTAGE)

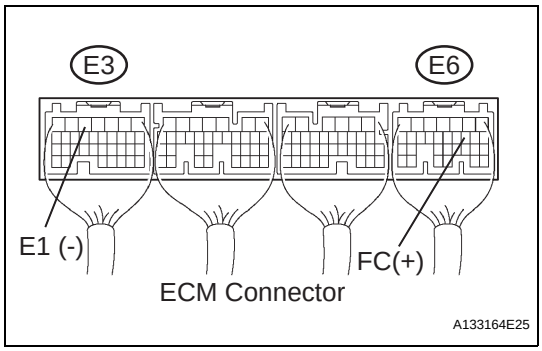


(a) Turn the ignition switch to ON.
(b) Measure the voltage between the terminals of the E3 and E6 ECM connectors.
**Standard voltage**

| Tester Connections | Specified Conditions |
|---|---|
| FC (E6-10) - E1 (E3-5) | Between 9 V and 14 V |

**OK** → **REPLACE ECM**

**NG**

## 5 CHECK HARNESS AND CONNECTOR (IGNITION SWITCH - CIRCUIT OPENING RELAY)

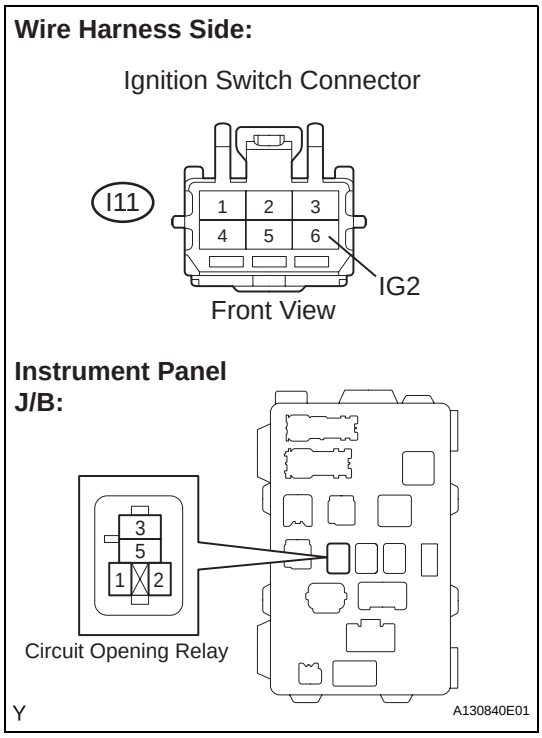


(a) Disconnect the I11 ignition switch connector.
(b) Remove the circuit opening relay from the instrument panel J/B.
(c) Check the resistance.
**Standard resistance (Check for open)**

| Tester Connections | Specified Conditions |
|---|---|
| IG2 (I11-6) - Instrument panel J/B (Circuit opening relay terminal 1) | Below 1 Ω |

**Standard resistance (Check for short)**

| Tester Connections | Specified Conditions |
|---|---|
| IG2 (I11-6) or Instrument panel J/B (Circuit opening relay terminal 1) - Body ground | 10 kΩ or higher |

(d) Reinstall the circuit opening relay.
(e) Reconnect the ignition switch connector.

**NG** → **REPAIR OR REPLACE HARNESS OR CONNECTOR**

**OK**

cardiagn.com

## 6 CHECK HARNESS AND CONNECTOR (ECM - CIRCUIT OPENING RELAY)

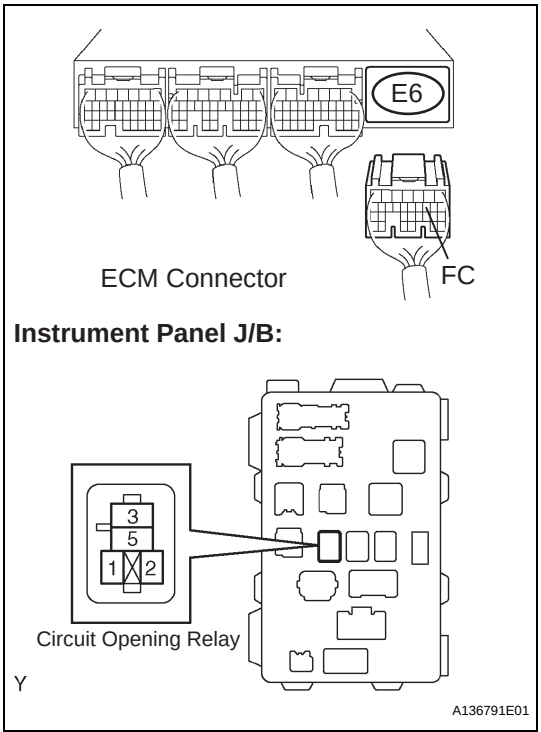


(a) Disconnect the E6 ECM connector.
(b) Remove the circuit opening relay from the instrument panel J/B.
(c) Check the resistance.

**Standard resistance (Check for open)**

| Tester Connections | Specified Conditions |
|---|---|
| FC (E6-10) - Instrument panel J/B (Circuit opening relay terminal 2) | Below 1 Ω |

**Standard resistance (Check for short)**

| Tester Connections | Specified Conditions |
|---|---|
| FC (E6-10) or Instrument panel J/B (Circuit opening relay terminal 2) - Body ground | 10 kΩ or higher |

(d) Reinstall the circuit opening relay.
(e) Reconnect the ECM connector.

**NG** → **REPAIR OR REPLACE HARNESS OR CONNECTOR**

**OK**

## 7 INSPECT FUEL PUMP

(a) Inspect the fuel pump (See page FU-23).

**NG** → **REPLACE FUEL PUMP**

**OK**

ES

cardiagn.com

| 8 | CHECK HARNESS AND CONNECTOR (CIRCUIT OPENING RELAY - FUEL PUMP, FUEL PUMP - BODY GROUND) |
|---|---|

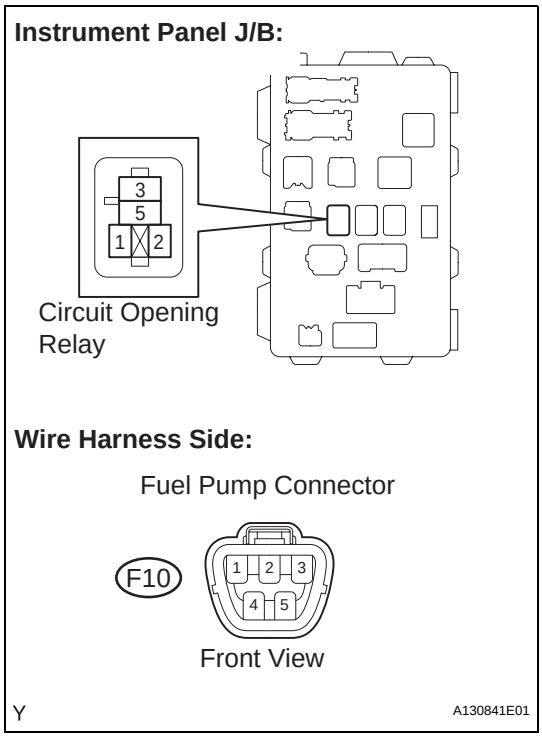


(a) Remove the circuit opening relay from the instrument panel J/B.
(b) Disconnect the F10 fuel pump connector.
(c) Check the resistance.

**Standard resistance (Check for open)**

| Tester Connections | Specified Conditions |
|---|---|
| Instrument panel J/B (Circuit opening relay terminal 3) - Fuel pump (F10-4) | Below 1 Ω |
| Fuel pump (F10-5) - Body ground | Below 1 Ω |

**Standard resistance (Check for short)**

| Tester Connections | Specified Conditions |
|---|---|
| Instrument panel J/B (Circuit opening relay terminal 3) or Fuel pump (F10-4) - Body ground | 10 kΩ or higher |

(d) Reconnect the fuel pump connector.
(e) Reinstall the circuit opening relay.

**NG** → **REPAIR OR REPLACE HARNESS OR CONNECTOR**

**OK**

**CHECK AND REPAIR HARNESS AND CONNECTOR (EFI RELAY - CIRCUIT OPENING RELAY)**

cardiagn.com